UNLESS OTHERWISE SPECIFIED, ALL DIMENSIONS ARE IN METRIC. DIMENSIONS OTHER THAN SIZE OF RAW MATERIAL SHALL BE HELD AS FOLLOWS WHEN EXPRESSED.	TO 1 DECIMAL PLACE ±0.4 TO 2 DECIMAL PLACES ±0.20 AS ANGLES ?	ISSUE	DATE	AUTH.
		A	09/01/93	A1085

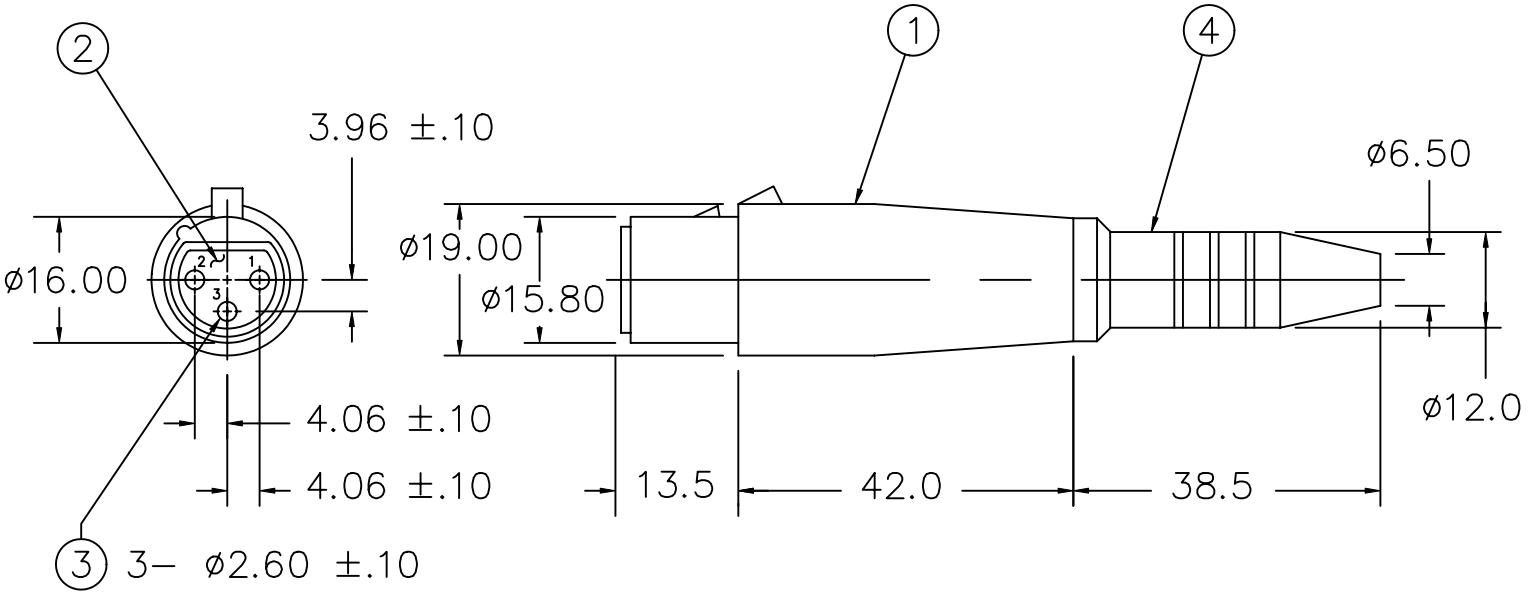

WIRING SCHEMATIC		
SOCKET 1	–	GROUND
SOCKET 2	–	TIP
SOCKET 3	–	RING

ITEM	PART	MATERIAL/FINISH
1	HOUSING	ZINC DIE CAST; NICKEL, BLACK NICKEL, OR GOLD PLATED
2	INSERT INSULATOR	PPO–1 UL94V–0 RATED; GRAY
3	SOCKET	PHOSPHOR BRONZE; SILVER OR GOLD PLATED
4	PHONE JACK	BRASS; NICKEL PLATED

SENIOR INDUSTRIES, INC.	TITLE: XLR ADAPTER			PART NO: SI–316–X–X	
	DATE: 04/08/93	DRAWN: KRM	CHKD:	SCALE: 1/1	SHEET: 1 OF 1